hidealite
Elektro Elco AB Tallvägen 5, 564 35 Bankeryd, Sweden
Phone + 46(0)36 290 60 00 | info@elco.se | www.hidealite.com

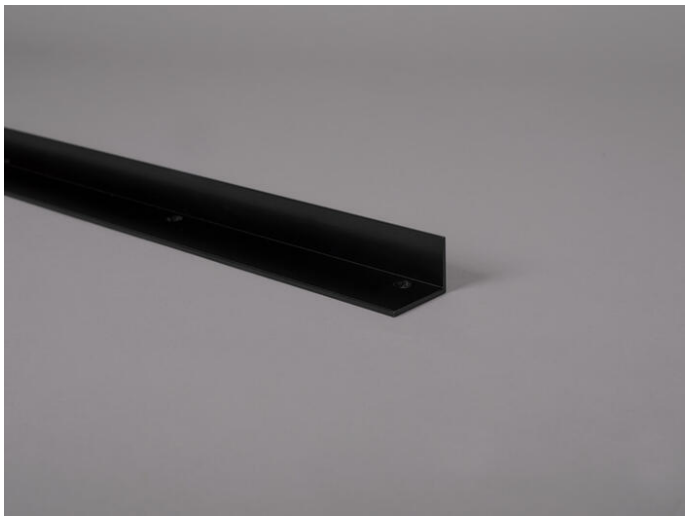

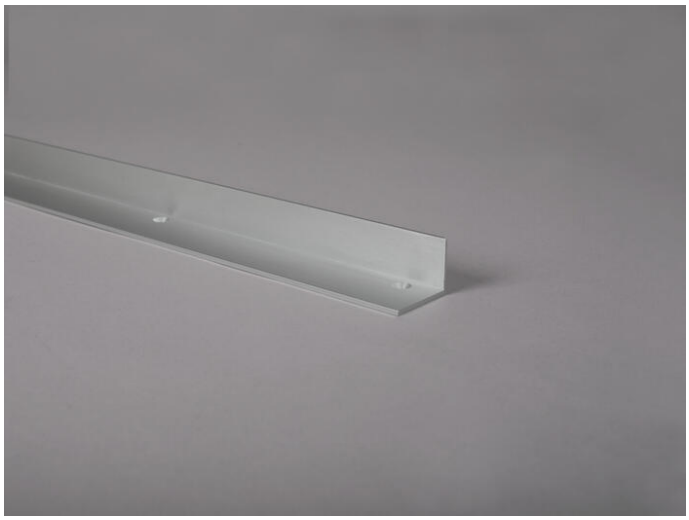

PROFILE ART HIDE BLACK 2M

Profile Art Hide is an L-shaped aluminium profile that hides your LEDstrip, screens the light and creates a nice even light on walls and in cupboards. Makes installation easier and helps to cool your LEDstrip; recessed screw holes. Fits most of our LEDstrips. Adapted for installation in both indoor and outdoor environments. Delivered in 2m lengths as standard.

DESCRIPTION

GTIN:	7392971142364
Item Name:	Profile Art Hide Black 2m

COLOR AND MATERIAL

Material:	Extruded, Aluminium
Color:	Black
Environmental Assessment:	Byggvarubedömningen
Available in special color:	Yes

MEASUREMENT AND INSTALLATION

Installation:	Surface mounted
Mounting Installation:	Screw Mounting
Width (mm):	40
Height (mm):	30
Depth (mm):	2000
Weight (kg):	0,95

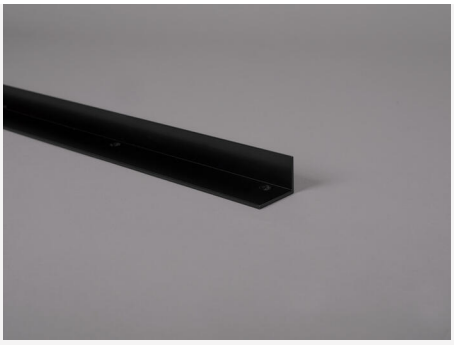

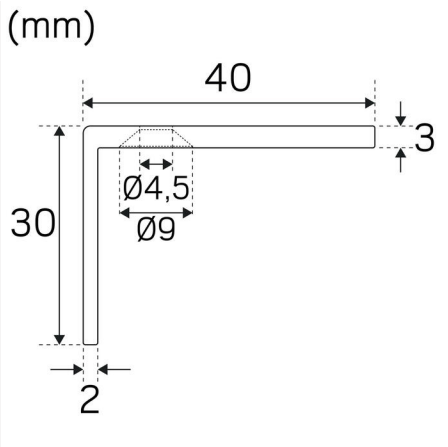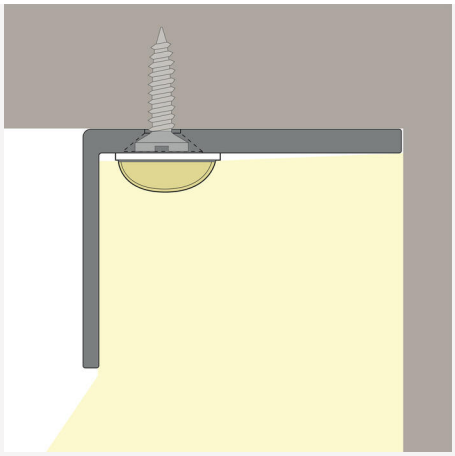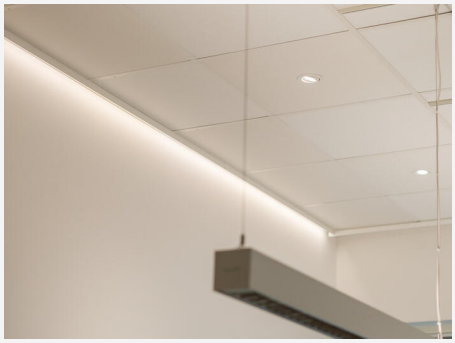
(mm)
40
3
30
Ø4,5
Ø9
2